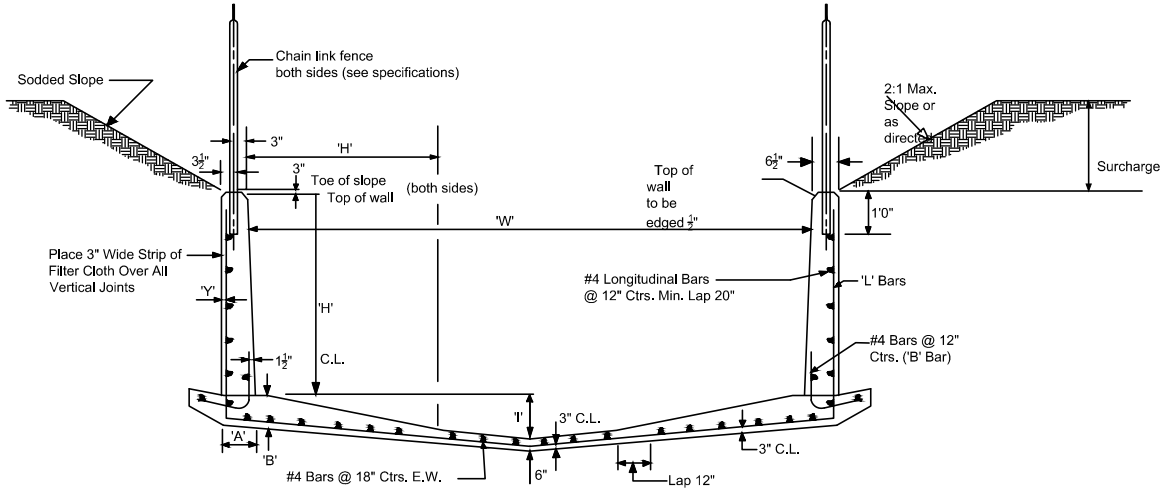

TYPICAL SECTION

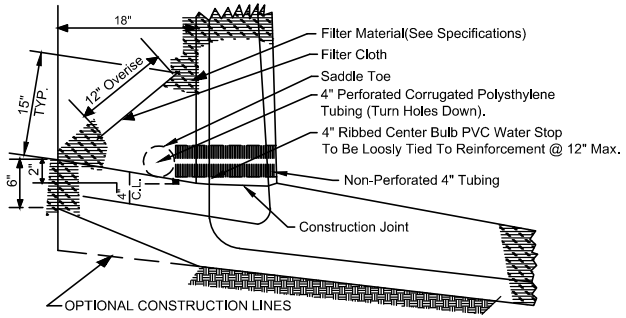

WATER STOP DETAIL
(TYPICAL SECTION)

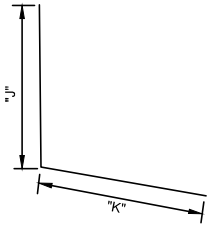

'L' Bars

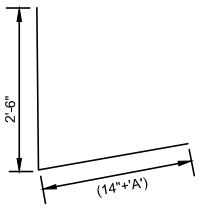

'B' Bars

1. DESIGN SPECIFICATION: ACI-318-83

2. CONCRETE: Shall have a minimum 28 day strength of 4000 psi. Air entrainment shall be $6\pm\frac{1}{2}$ percent. Maximum slump at time of placement shall be 4 inches. Concrete shall not contain less than 6.2 bags of cement per yard.

3. REINFORCING STEEL: To be ASTM A575 grade 60. Bending dimensions are out to cut. Tolerances for placing reinforcement, in the direction of the thickness of the member shall be $+/-\frac{1}{2}$ inch.

4. HORIZONTAL CONSTRUCTION JOINTS: On footings shall be clean free of laitance and intentionally roughened to a full amplitude of approximately $\frac{1}{4}$ inch. Construction joints shall be allowed only where shown on plans.

5. TRANSVERSE EXPANSION JOINTS: To be placed at 30 foot spacing. Use $\frac{3}{4}$" thick asphalt impregnated fiberboard. No dowels or key required. Joint must have elastomeric sealant.

6. FILTER CLOTH: Shall be pervious sheets of strong rot-proof plastic fabric meeting the following specs:
Burst Strength = 125 lb (minimum)
Grab Tensile = 90 lb (minimum)
Equivalent Opening Size .0117 in (maximum), .0059 in (minimum)

7. SURCHARGE HEIGHT: Maximum surcharge height (distance from top of wall to top of slope) shall be 5 feet when using a 2:1 slope. For surcharge heights greater than 5 feet use 3:1 slope.

8. BACKFILL COMPACTION: May be obtained by jetting or flooding if the contractor feels proper compaction can be obtained by these methods. At time of acceptance of the work by the engineer, the toe of the slope shall be at least 3" above top of wall.

9. WEEP HOLE: Shall be located at 30 foot centers and shall be located in middle of wall section.

REVISION		
ITEM NO.	DESCRIPTION OF CHANGE	APPROVAL DATE

TOWN OF COLLIERVILLE
CONCRETE CHANNEL LINING

TOC-214