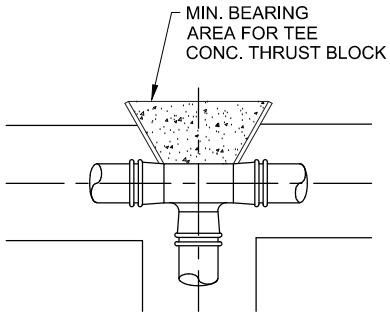

TEE

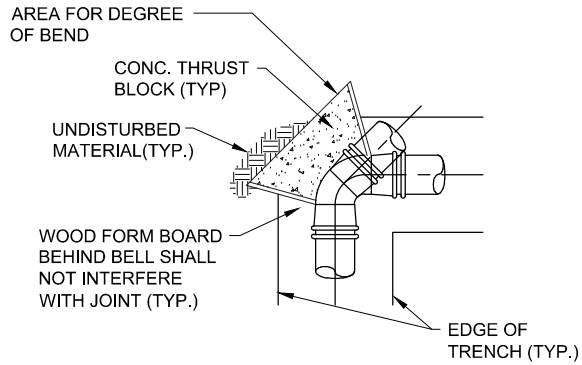

BENDS

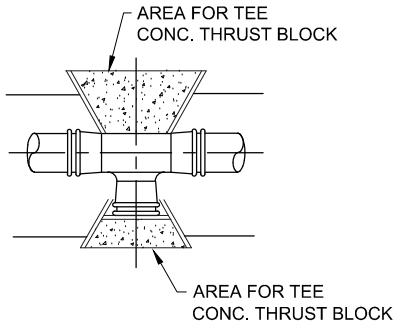

TEE WITH PLUG

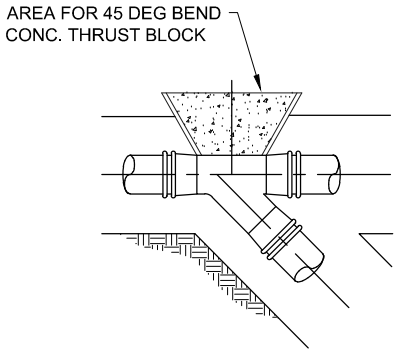

WYE

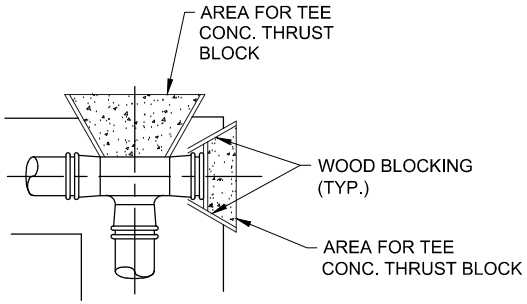

TEE WITH END PLUG

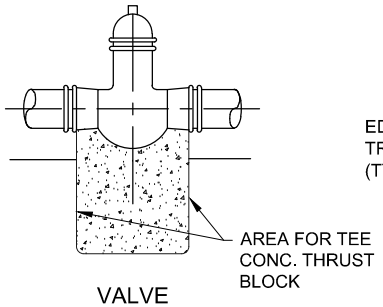

VALVE

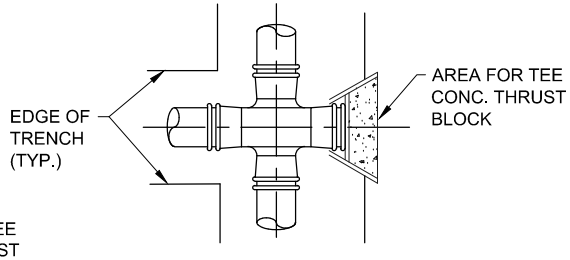

CROSS WITH PLUG

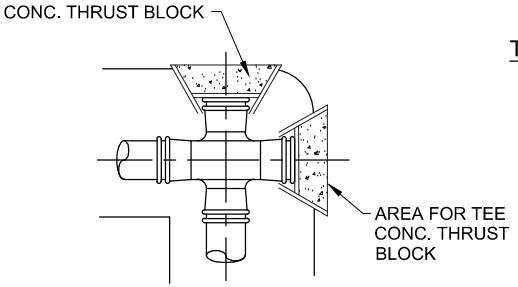

CROSS WITH TWO PLUGS

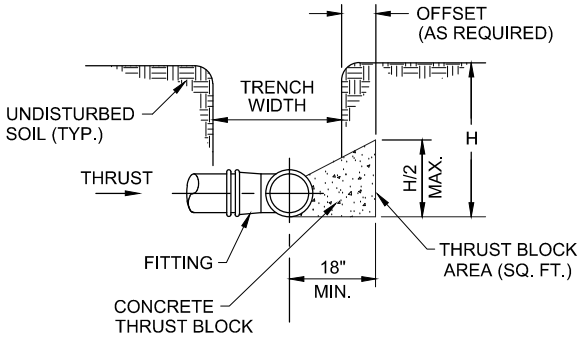

TYPICAL SECTION

MINIMUM BEARING AREA (SF) FOR THRUST BLOCKS					
PIPE DIA. (IN.)	DEAD ENDS & TEES	BENDS (DEGREES)			
		11.5	22.5	45	90
6	3.74	0.75	1.46	2.86	5.29
8	6.43	1.29	2.51	4.92	9.09
10	9.68	1.94	3.78	7.41	13.69
12	13.69	2.74	5.34	10.47	19.35
18	29.87	5.98	11.65	22.86	42.24
24	52.28	10.48	20.40	40.01	73.93
30	80.43	16.12	31.38	61.55	113.74

NOTE: ABOVE TABLE VALUES BASED ON 200 PSI MAXIMUM PRESSURE & 2000 PSF BEARING CAPACITY.

NOTES:

1. THRUST BLOCK BEARING AREAS SHALL BE POURED AGAINST UNDISTURBED MATERIAL. WHERE TRENCH WALL HAS BEEN DISTURBED, EXCAVATE ALL LOOSE MATERIAL AND EXTEND THRUST BLOCK TO UNDISTURBED MATERIAL.
2. EXTEND THRUST BLOCK ALONG THE FULL LENGTH OF THE FITTING. PROTECT ALL FLANGES, BOLTS, JOINTS, ETC. WITH PLASTIC BEFORE POURING CONCRETE.
3. ROUGH BLOCKING FORMS SHALL BE USED IN COMBINATION, AS REQUIRED TO SUIT THE SPECIFIC FITTING ARRANGEMENT.
4. CONCRETE TO BE 4000 PSI.

REVISION		
ITEM NO.	DESCRIPTION OF CHANGE	APPROVAL DATE

TOWN OF COLLIERVILLE

THRUST BLOCK DETAILS

SCALE: NONE

TOC-407