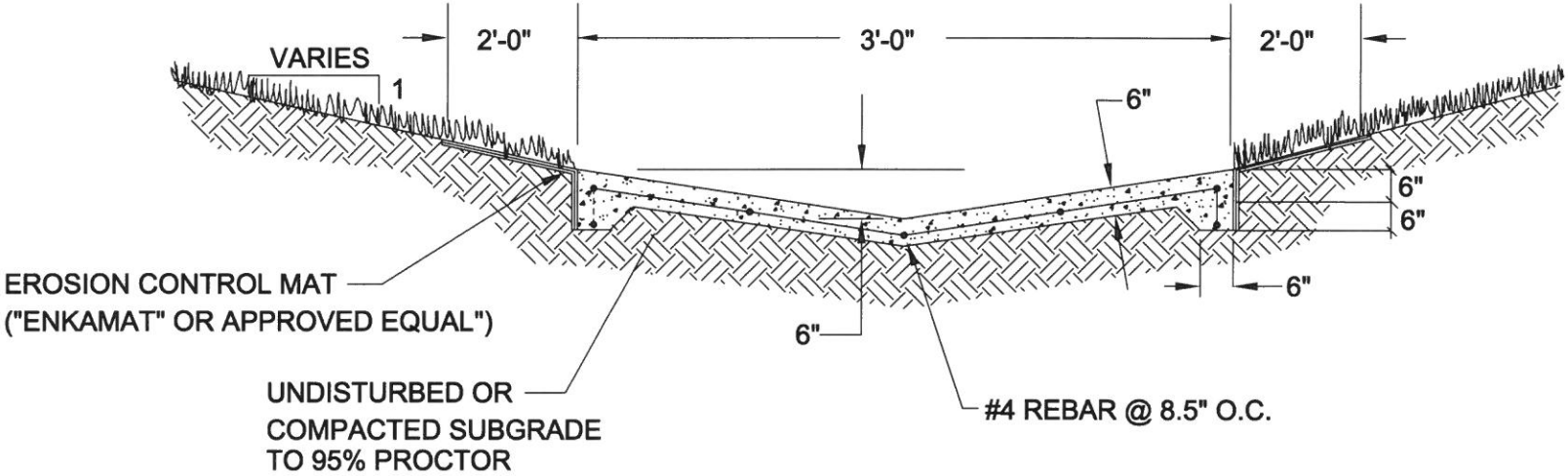

4,000 PSI CONCRETE

REVISION		
ITEM NO.	DESCRIPTION OF CHANGE	APPROVAL DATE

TOWN OF COLLIERVILLE
CONCRETE SWALE

TOC-212